PVP 14

Code: CS1T5, IT1T5, IT2T3RS

I B.Tech - I Semester – Regular Examinations – November 2015

BASIC ELECTRICAL ENGINEERING

(Common for CSE, IT)

Duration: 3 hours Max. Marks: 70

PART – A

Answer ***all*** the questions. All questions carry equal marks

11x 2 = 22 M

1. a) Define Kirchoff 's Laws.
   b) State and Explain Ohm's Law.
   c) Explain Faraday's laws of Electro magnetic Induction.
   d) Write the analogy between electrical circuits and magnetic circuits.
   e) Derive the impedance of series RLC circuit.
   f) Define form factor and peak factor.
   g) Classify the DC Motors and explain.
   h) Explain the necessity of starters in a DC Machine.
   i) Derive the condition for Maximum efficiency in a transformer.
   j) Write the essential features of measuring instruments.
   k) Write the properties of Resistive Element.

PART – B

Answer any ***THREE*** questions. All questions carry equal marks. 3 x 16 = 48 M

2. a) Find the current flowing through 3 Ω resistance using mesh analysis. 8 M

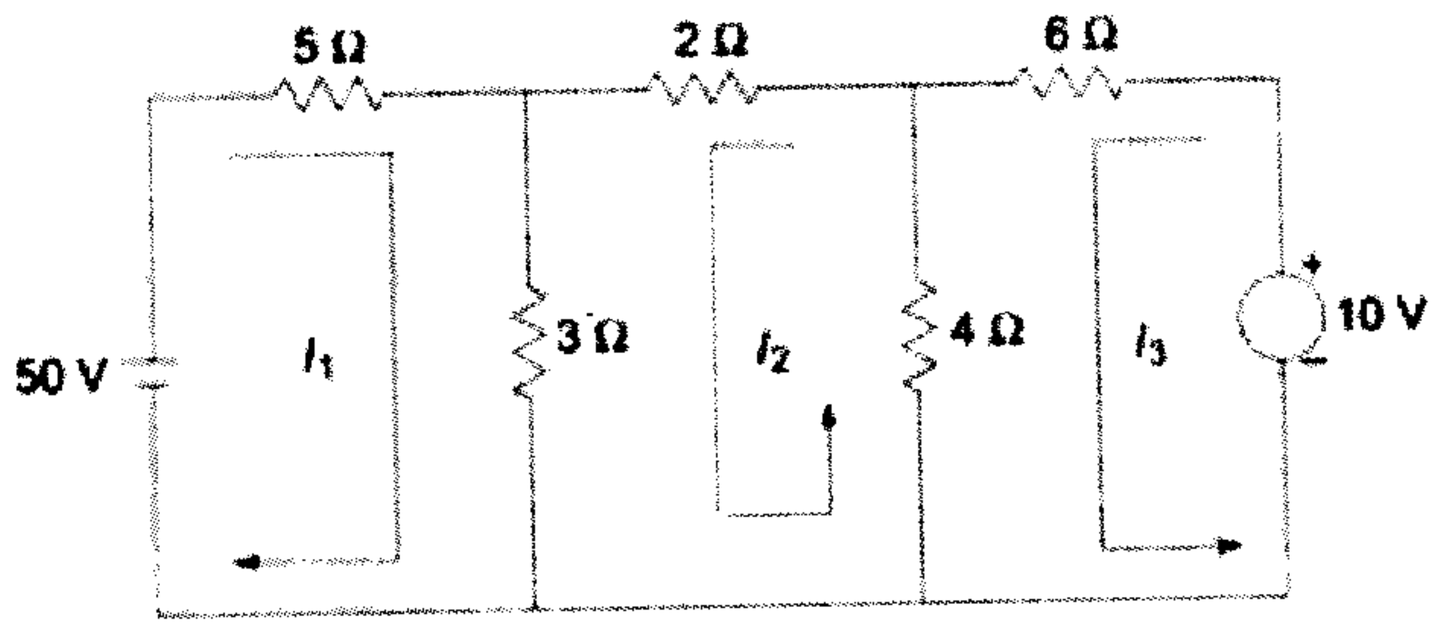

b) Explain Star to delta and delta to star transformation techniques with necessary derivations. 8 M

3. a) Define self and mutual inductance. Derive the expression for coefficient of coupling in terms of self & mutual inductances. 8 M

b) Two identical coils connected in series have an Equivalent inductance of 0.4 H when connected in aiding, and an equivalent inductance of 0.2 H when the connection is opposing. The coefficient of coupling is 0.28. Calculate mutual inductance and self inductance of the coils. 8 M

4. a) Explain 10 M

i) Active Power ii) Reactive Power

iii) Apparent Power iv) Complex Power

v) Power factor

b) Derive the RMS value of Triangular waveform with a peak voltage 'V_m'. 6 M

5. a) Explain the Principle of operation of DC Motor in detail. 8 M

b) Explain the Constructional features of three phase induction motor with a neat sketch. 8 M

6. a) What is a Transformer and explain its operation with and without load? 8 M

b) Explain the PMMC instrument with a neat sketch and explain its merits & demerits. 8 M

PVP 14

Code: CS1T5, IT1T5, IT2T3RS

I B.Tech - I Semester – Regular / Supplementary Examinations
December - 2016

BASIC ELECTRICAL ENGINEERING
(Common for CSE & IT)

Duration: 3 hours Max. Marks: 70

PART – A

Answer ***all*** the questions. All questions carry equal marks

11 x 2 = 22 M

1.

a) State Ohm's law.
b) What will be the resistance of individual elements which when connected in delta has 3Ω each is transformed into star connection?
c) State Kirchhoff's current law.
d) Define flux density.
e) What is the difference between series aiding and opposition in magnetic coils?
f) Write the formula for finding r.m.s value.
g) What is a phasor?
h) Write the formula for generated emf of a DC generator.
i) Write the formula for slip.
j) Power remains constant from primary to secondary in a transformer. Justify.
k) Which current measuring instrument is to be used for DC systems?

PART – B

Answer any ***THREE*** questions. All questions carry equal marks. 3 x 16 = 48 M

2. a) Calculate the voltage across 6Ω resistor. 8 M

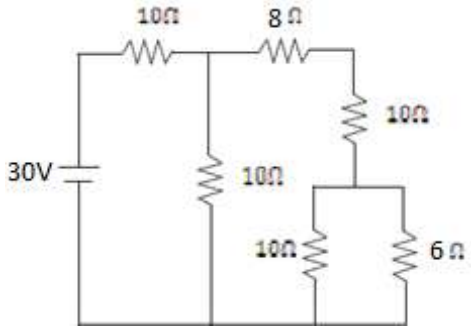

b) Derive the conversion from star to delta connection. 8 M

3. a) Briefly discuss Faraday's laws of electromagnetic induction discuss statically and dynamically induced EMFs. 8 M

b) Obtain an expression for equivalent inductance when two coils are connected in 8 M
i) series aiding ii) series opposing

4. a) Calculate the rms value and average value of an alternating sinusoidal voltage. Also obtain the expression form factor and peak factor. 8 M

b) Obtain the individual power of a series R, L, C circuit connected to an ac voltage source of peak 230 V, 50Hz where R=100Ω, L=2mH, C=10μF. 8 M

5. a) Explain the need for starters in DC machines. 8 M

b) Discuss about the rotating magnetic field in a three phase induction machine. 8 M

6. a) Explain the principle and derive E.M.F Equation of a Transformer. 8 M

b) Briefly discuss about operating principle of PMMC meter. 8 M

PVP 14

Code: CS1T5, IT1T5, IT2T3RS

I B.Tech - I Semester – Regular / Supplementary Examinations
November 2017

BASIC ELECTRICAL ENGINEERING
(Common for CSE & IT)

Duration: 3 hours Max. Marks: 70

PART – A

Answer ***all*** the questions. All questions carry equal marks

11 x 2 = 22 M

1.
a) Explain kirchoff's laws.
b) A resistance of 10 ohms is connected to a voltage of 25V DC supply. Calculate the power loss.
c) Explain Faraday's laws of electromagnetic Induction.
d) Explain self inductance and mutual inductance of an magnetic circuit.
e) Explain the terms R.M.S value form factor and peak factor.
f) Draw and explain phasor diagrams for ideal and practical capacitance and inductive circuits by taking voltage as reference.
g) State the working principle of DC motor.
h) Briefly describe the necessity of starters in DC motors.
i) Explain the concept of rotating magnetic field in three phase induction motor.

j) Draw and explain the phasor diagram for transformer under noload condition.

k) Explain the operating principle of PMMC instruments.

PART – B

Answer any ***THREE*** questions. All questions carry equal marks.

3 x 16 = 48 M

2.a) State and explain voltage division technique and current division technique. 8 M

b) Explain mesh analysis and nodal analysis with relevant examples. 8 M

3.a) Derive an expression for force on a current carrying conductor placed in magnetic field. 8 M

b) Explain the analogy between electric and magnetic circuits. 8 M

4.a) Derive an expression for the attending current waveforms of

i. Average value
ii. RMS value
iii. Form factor
iv. Peak factor 8 M

b) Explain the analysis of a single phase series R.L circuit. Draw the phasor diagram. 8 M

5.a) Derive an expression for torque developed in the armature of DC motor. 8 M

b) A 6 pole, 3- induction motor runs at 1140rpm on full load when supplied power from a 60Hz supply. Determine the slip at full load. 8 M

6.a) Derive the relation between the torque and inductance of a moving iron instrument. 8 M

b) Explain the different losses in a transformer and variation of losses with load current. 8 M

PVP 14

Code: CS1T5, IT1T5/ IT2T3RS

I B.Tech - I Semester – Regular/Supplementary Examinations
November 2018

BASIC ELECTRICAL ENGINEERING
(Common to CSE & IT)

Duration: 3 hours Max. Marks: 70

PART – A

Answer ***all*** the questions. All questions carry equal marks

11 x 2 = 22 M

1. a) Write statements of Kirchhoff's laws?
   b) Distinguish between ideal and practical voltage source?
   c) Write any two analogies between electric and magnetic circuits?
   d) Explain the dot convention used in magnetically coupled circuits?
   e) Define peak factor?
   f) Define RMS value of sinusoidal waveform with expression?
   g) What is the function of holding coil in a 3-point starter?
   h) Define the slip of an induction motor.
   i) Why rating of the transformer is given in KVA? Explain.
   j) Define controlling and damping torque.
   k) A 100Ω resistance is directly switched on across a 10 V battery. What is the current through resistor? How much is the power loss?

PART – B

Answer any ***THREE*** questions. All questions carry equal marks.
3 x 16 = 48 M

2. a) Two batteries E1 and E2 having e.m.fs of 6V and 2V respectively and internal resistances of 2 and 3 ohms are connected in parallel across a 5 ohm resistor. Calculate i) the current through each battery (ii) terminal voltage 8 M

b) When three resistors are connected in parallel show the relation between the currents and obtain the equation for currents. 8 M

3. a) Derive the relation between self inductance, mutual inductance and coefficient of coupling. 8 M

b) What is a magnetic circuit? Compare magnetic circuit with an electric circuit. 8 M

4. a) Calculate the average and rms value for a half -wave rectified sinusoidal quantity as shown in figure. 8 M

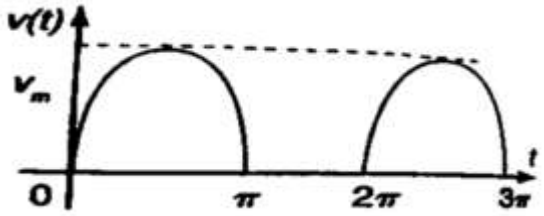

b) A coil has a resistance of 4 Ω and an inductance of 9.55 mH. Calculate (i) the reactance, (ii) the impedance, and (iii) the current taken from a 240V, 50 Hz supply. Determine also the phase angle between the supply voltage and current. 8 M

5. a) Explain the working of D.C. motor with neat diagram. 8 M

b) Explain the concept of rotating magnetic field? 8 M

6. a) Explain construction and working of a Single phase transformer? 8 M

b) Describe the working of a moving iron instrument with a neat sketch. 8 M